Description

The Model 570 Easy Entry™ RF Series Receiver and Model 575 Key Ring Transmitter are used to remotely open or close a garage door and arm or disarm a DMP XR10 or XR20 Command Processor™ Panel. For a quick and simple installation, the 570 receiver connects to the XR10 or XR20 panel via the Keypad bus. The Model 575 transmitter provides buttons to arm or disarm the panel, activate a garage door, and provide a panic button for emergency situations. Every time a button is pressed, the transmitter sends one of four billion randomly changing codes that ensure state-of-the-art anti-scanning security. The receiver includes a push button and LED for easy programming and a wire harness. Also included is a high intensity LED on a mounting plate for a visual indication of the panel's armed status.

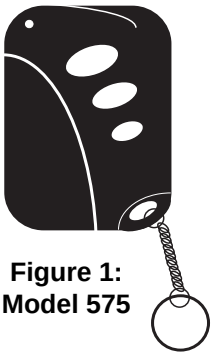

Figure 1: Model 575

Wiring the Receiver

DMP XR10/XR20 Panel

Red, Yellow, Green, and Black, Wires

Connect the 570 receiver harness red, yellow, green, and black wires to the Keypad bus of an XR10 or XR20 panel. The panel connections are marked RED (7), YEL (8), GRN (9), and BLK (10) and correspond to the same color wires as the receiver harness. See Figure 3.

Garage Door

Red/White and White Wires

All garage door openers have a wall mounted push button switch that activates the door via a two-wire connection. These two wires connect the push button switch to the garage door motor. The output provided from the receiver is a 10 amp relay and is turned ON or OFF using the middle button on the 575 Key Ring transmitter. Connect the red/white (N/O) and white (common) wires of the 570 receiver harness in parallel with the existing push button switch wires or to the garage door motor. When connecting at the garage door motor, trace the wires from the push button switch to the motor to determine the correct connection. Most garage door motors use terminals #1 and #2, except MOM Crusader models, which use terminals #2 and #3.

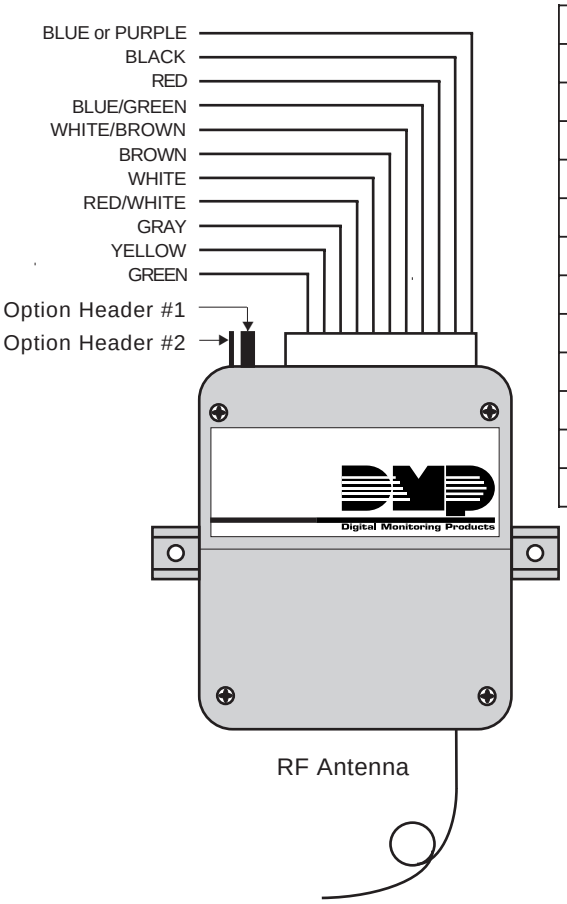

Figure 2: Model 570

Receiver Harness Wiring		
Wire Color	**Description**	**Connection**
Blue or Purple*	Switched ground (-) Output	Armed Status LED (black wire)
Black	Ground	XR10/20 - black (10)
Red	+12 VDC	XR10/20 - red (7)
Blue/Green	Optional Relay N/C	Optional Accessories
White/Brown	Optional Relay N/O	Optional Accessories
Brown	Optional Relay Common	Optional Accessories
White	Garage Door Relay Common	Garage door switch
Red/white	Garage Door Relay N/O	Garage door switch
Gray	Switched Ground (-) Output	Garage door timed output
Yellow	Data Transmit to panel	XR10/20 - yellow (8)
Green	Data Receive from panel	XR10/20 - green (9)

*** Note:** The 570 receiver harness may include either a blue or a purple wire for this connection.

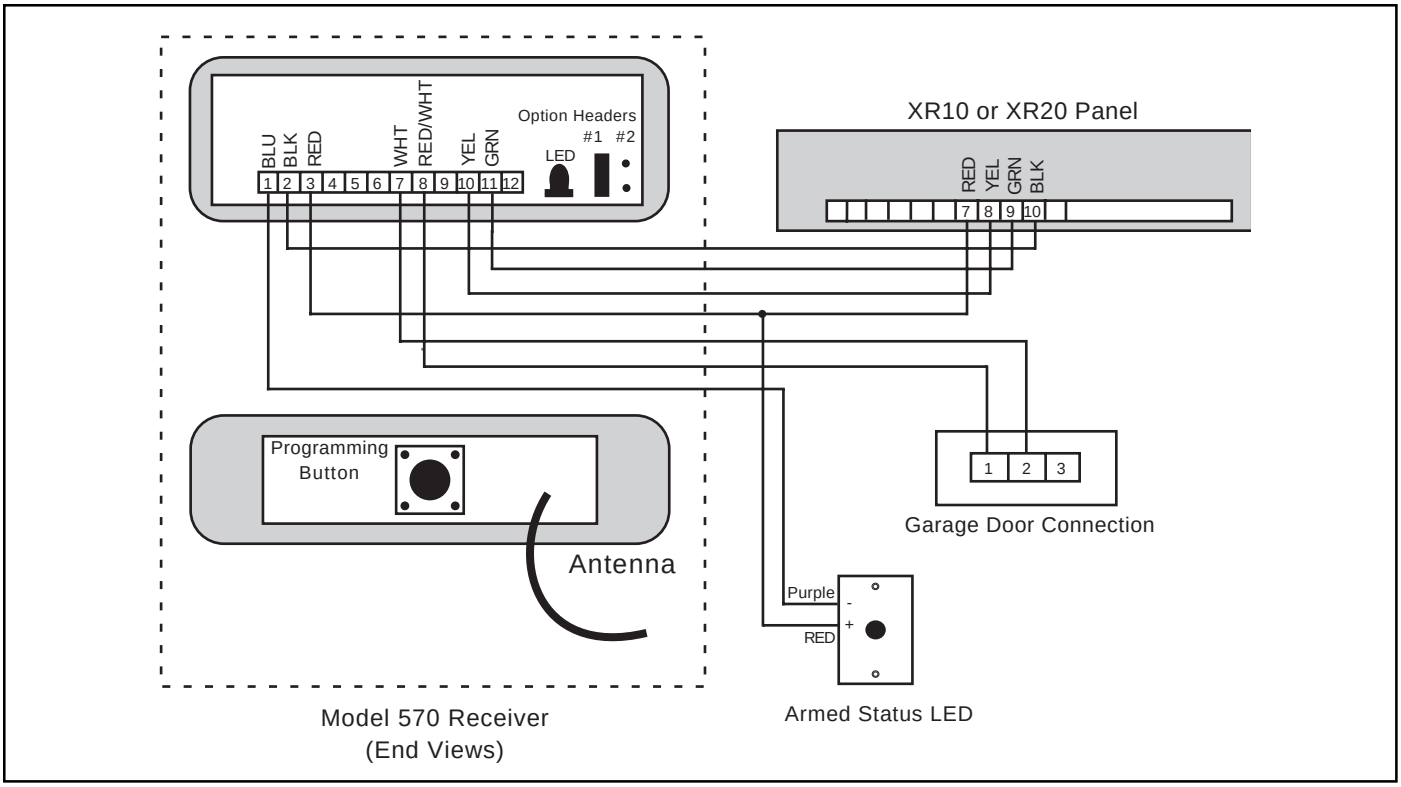

Figure 3: Wiring diagram

Armed Status LED

Blue or Purple Wire (switched (-) ground)

Mount the included security plate and Armed Status LED in a location such as the garage or the front door where a visual indication of the panel's armed status can easily be seen.

The Armed Status LED includes a purple wire (-) and red wire (+12 VDC) for installation. Connect the Status LED purple wire (-) to the blue or purple wire of the 570 receiver harness. Connect the Armed Status LED red or purple wire to terminal 7 of the XR10 or XR20 panel. See Figure 3.

The operation of the Armed Status LED is as follows:

LED	SYSTEM STATUS
SLOW BLINKING	Exit Delay
ON	Armed
OFF	Disarmed
FAST BLINKING	Alarm

Optional Accessory Relay

Brown (C), White/Brown (N/O), and Blue/Green (N/C) Wires

When the panic button operation is not enabled (see **Operating the Key Ring Transmitter**), a relay is provided for control of optional accessories such as Malibu lighting, sprinklers, or X-10 automation. The output provided from the receiver is a 5 amp form C relay and is turned ON or OFF using the bottom button on the 575 Key Ring transmitter. The brown wire is the relay common, the blue/green wire is the N/C contact, and the white/brown wire is the N/O contact.

Garage Door Timed Output

Gray Wire (switched (-) ground)

A switched (-) ground output, rated at 500 mA, is provided on the gray wire of the receiver and turns on for three minutes anytime the middle button of the transmitter is pressed. This output is available to trigger additional lighting that may be desired when the garage door is opened or closed.

Programming the Receiver

The 570 RF Series receiver arms or disarms an XR10 or XR20 panel by sending a four digit user code just as if the code was entered at a keypad. The user code must be added to the 570 and must also be programmed into the panel (see **XR10 or XR20 User's Guide**).

Adding the User Code

The single user code is added by pressing and ***holding*** the programming button on the receiver (see Figure 3). The programming LED on the receiver turns ON for three seconds and then turns OFF. When the LED turns OFF, release the programming button and the LED flashes indicating the user code programming mode. While the programming LED is flashing, enter the four digit user code on the keypad. After the fourth digit is entered, the LED turns OFF indicating the user code is learned.

Adding and Deleting Key Ring Transmitters

To learn a transmitter, press the programming button on the receiver ***once*** and the programming LED turns ON steady. While the LED is ON, press the top button of the key ring transmitter three times. The LED turns OFF indicating the transmitter has been learned. Up to seven transmitters can be learned. The eighth transmitter learned overwrites the first learned transmitter.

To delete a transmitter from the receiver, ***all*** transmitters will be deleted. Press and hold the receiver programming button for seven seconds. During this time, the programming LED will pulse ON, OFF, and ON again. After the LED turns ON the second time, the receiver memory is cleared and ***all*** transmitters are deleted.

Setting Option Header #1: Panic or Relay

When the jumper of the receiver is installed on option header #1 (see Figures 2 and 3), the bottom button of the key ring transmitter operates as a Panic button. This is equivalent to pressing the badge panic keys on a DMP keypad.

Setting Option Header #2: Relay Momentary or Toggle

When the jumper of the receiver is ***not*** installed on option header #1, the bottom button of the key ring transmitter operates the optional accessory relay of the receiver. The operation of the relay is determined by option header #2 of the receiver.

When the jumper is installed on option header #2, pressing the bottom button on the transmitter will cause the relay to turn ON for one second and then turn OFF. Each press causes the relay to turn ON and then OFF.

When the jumper is ***not*** installed on option header #2, pressing the bottom button causes the relay COMMON to toggle to the N/O or N/C contact. Each press causes a transition of the relay to the other poll.

When the programming headers are setup, mark the appropriate box for the operation of the key ring transmitter on page four of this document.

Specifications

Specifications	
Remote Transmitter	
Battery*	12VDC Mini (type 23A)
Range	150 feet
Receiver	
Power input	12VDC from panel
Standby current	15 mA
Frequency	303 Mhz
Temperature range	-5ºF to 160ºF
Garage door relay contacts	10 amp
Optional accessory relay contacts	5 amp
* Replace battery with type 23A at least once a year.	

Operating the Key Ring Transmitter

The Model 575 Key Ring transmitter provides three buttons for operation. The small LED on the transmitter lights anytime a button is pressed.

Transmitter Button	Operation
Top	Alarm ON/OFF/Perimeter
Middle	Garage Door OPEN/CLOSE
Bottom	PANIC or Optional Accessories

Top Button

Arming and Disarming the System

Pressing the top button of the 575 Key Ring transmitter sends the four digit user code to the panel. This code arms or disarms all areas of the panel. The Armed Status LED lights indicating an armed status. Pressing the top button again disarms the system.

Pressing the top button for more than three seconds arms the perimeter protection only. Pressing the top button again disarms the system.

Middle Button

Garage Door

The timed output can be used to trigger additional accessories such as driveway, porch, or Malibu lighting. Pressing the middle button of the key ring transmitter activates the garage door.

Bottom Button

The bottom button of the key ring transmitter may be set up to send either a panic signal or turn optional accessories ON or OFF.

- ❑ *Panic Button*
  Pressing the bottom button for more than three seconds sends the Panic signal. This is equivalent to pressing the badge panic keys on a keypad.

- ❑ *Optional Accessories*
  Pressing the bottom button on the transmitter will cause the optional accessories to turn ON or OFF.